Mobrey

Vertical magnetic level switches

- Unique 3 magnet latching switch mechanism
- No springs in switch mechanism
- Weatherproof
- Flameproof
- Direct mount
- Chamber mount
- Displacer controls

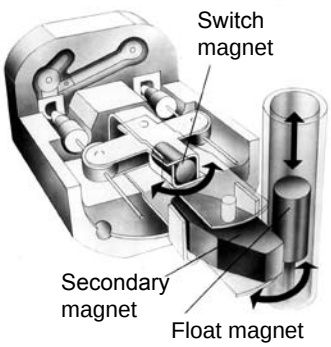

Operation
The float carries a stainless steel sheathed permanent magnet which rises and falls in the glandless pressure tube with changing liquid level. A switch mechanism is mounted inside the enclosure adjacent to the pressure tube. Switching is achieved with the unique Mobrey 'three-magnet' system, giving snap-action 'latch-on' switching.

Vertical movement of the float magnet in the pressure tube simultaneously actuates the secondary and tertiary magnets in the switch mechanism to operate the contacts. This 'three-magnet' system enables the float magnet to pass on and actuate switch mechanisms at other levels. Switch mechanisms already actuated cannot re-set until the return of the primary magnet actuates the magnet system once again.

Contents

ATEX

mobrey

EMERSON
Process Management

Introduction

Whether you require a switch for critical area applications or just general purpose control, the extensive range of Mobrey switches ensures that we will always have a solution to your particular problem.
A choice of carbon steel chambers is available, or for more vigorous applications we supply a series of 316 stainless steel chambers. A variety of tank and process connections is available to make installation simple and economic. This gives you the choice to meet your application in keeping with your budget.

Mobrey vertical magnetic level switches for industrial and process control use have been available for over 20 years and have been steadily gaining a reputation for quality and reliability.

Based on the industry standard boiler water level controls these controls employ the same three magnet switch mechanism for snap-action latching switching.

The design of this unique switch mechanism overcomes all the inherent problems of mercury tubes and micro switches. Even under severe vibration conditions there are no springs to cause contact bounce, hover, or even failure. The snap action magnets give positive stable latching time after time after time.

There are two switching functions available :
2 x SPST (SPCO) switching or DPDT (DPCO) switching, and each comes in four variants :-

- General purpose use with silver cadmium oxide contacts for long life.
- Low power circuit with gold plated contacts for use in low current/voltage applications such as I.S. circuits.
- High power circuits giving up to 10A switching capability.
- Hermetically sealed for the ultimate in reliability - sealed for life.

When controls are required to operate in extreme conditions, the unique Mobrey hermetically sealed switch provides dependable life long operation that you can rely on. With all its moving parts and contacts completely enclosed, this genuine hermetically sealed switch is suitable for use in corrosive atmospheres and low temperature environments.

Features

- Relevant chambers are supplied CE marked and fully compliant with the Pressure Equipment Directive (97/23/EC)
- Unique switching mechanism - totally reliable
- No springs in switch mechanism - positive snap action switching
- Vibration resistant - eleminates spurious trips
- Multi-switching models - cost effective control
- Genuine hermetically sealed switch option - totally safe and secure
- Extensive range of chambers - suitable for most applications
- Designed to ASME B31.3
- Weld procedures approved to EN ISO 15614-1 and ASME IX
- Welders approved to EN 287-1
- Material certification to EN 10204, 3.1
- Materials to ASTM and B.S. Standards

Approvals

Underwriters Laboratories (UL) Approval
Explosion Proof for Class I, Div 1, Groups B, C & D
Class II, Div 1, Groups E, F & G

General Area, Weatherproof type NEMA 4X

Canadian Standards Association (CSA) Approval
Explosion Proof for Class 1, Groups B, C & D

General Area, Weatherproof to NEMA 4X

ATEX Approval
Flame Proof ATEX II 1/2G, EExd IIC T6
(-50°C≤Ta≤60°C)

Intrinsically Safe Use

For use in intrinsically safe circuits, gold plated switch contacts are recommended (see page 4). Users are reminded that it is their responsibility to obtain the necessary system approval and licences for such circuits.

EN ISO 9001 : 2000
Mobrey Ltd has been assessed and approved by Lloyds Register Quality Assurance against BS EN 9001 : 2000 for the design, development, assembly and re-calibration of precision instruments and systems for the measurement and indication of electrical signals, gas and liquid density, viscosity, pressure, level, flow and water/steam systems.

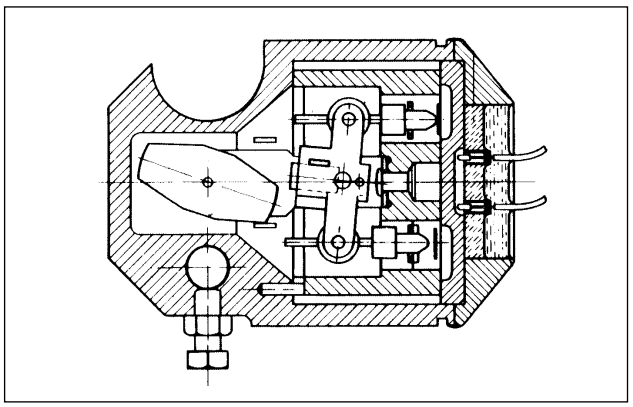

Section through type H4 switch mechanism

Hermetically sealed switch mechanism

Quality Assurance

With over 20 years worldwide experience in the major power, nuclear and petro-chemical industries, Mobrey Measurement is able to accommodate testing, surveying and documentation requirements as specified at the time of order. Inspection by customers or nominated inspection agencies can be arranged.

Mobrey switch mechanisms

4 contact type: D4, X4, P4, H4

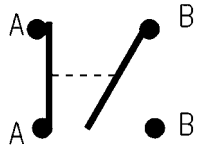

2 × independent SPST
AA make on rise: BB Make on fall

8 contact types: D8, X8, P8, H8

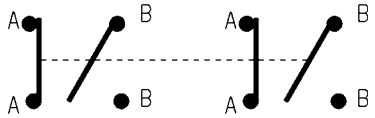

Double pole double throw
(4 × independent SPST)
AA make on rise, BB make on fall

Note: For DPDT operation, installer must common any one pair of A and B wires in the terminal block for each of the two ends of the switch mechanism.

Type D4, D8: General purpose switch mechanism.
Type D4U, D8U: General purpose switch mechanism for UL & CSA
Type X4, X8: High current switch mechanism.
Type P4, P8: Switch mechanism with gold plated contacts for use in low power or intrinsically safe circuits.
Type H4, H8: Hermetically sealed mechanism with gold plated contacts. All moving parts and contacts enclosed is an inert gas filled stainless steel enclosure. Suitable for use in low temperatures, contaminated atmospheres and intrinsically safe circuits.

Electrical rating

Type	Temp wetside °C	Low temp use	AC max. values			DC max. values			
			VA	Volts	Amps	Watts	Volts	Res amps	Ind amps
D4, D8	400	No	2000	440	5	50	250	5	0.5
D4U,D8U	400	No	2000	440	5	50	250	5	0.5
X4, X8	250	No	2000	440	10	50	250	10	0.5
P4, P8	400	No	6	250	0.25	3.6	250	0.25	0.1
H4, H8	250	-50°C	2000	440	5	50	250	5	0.5

Each switch mechanism has flying leads which are factory wired to ceramic terminal blocks fixed in the switch enclosure.

Warning

Gold plating on the contacts of P4 and P8 switch mechanisms may be permanently damaged if the mechanisms are used to switch circuits with values greater than those shown above.
Switches must not be used for the direct starting of motors. Contacts should be wired in series with the operating coils of relays, contactor starters or solenoid valves and fused separately.

Switch enclosures

Enclosure modules
R4N, S4N, L4N

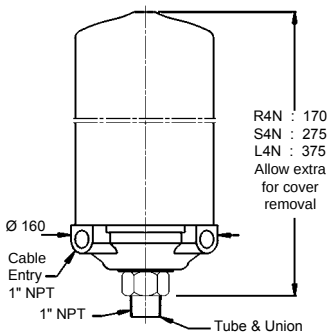

Weatherproof industrial enclosure

Weatherprooof NEMA 4X / IP66.
Aluminium alloy based/drawn steel cover.
Type R4N: Fixed switch
Type S4N: 94mm switch adjustment
Type L4N: 194mm switch adjustment

Flameproof & Explosion Proof (Weatherproof NEMA 4X / IP66)
Aluminium alloy base and cover "A"
Cast iron base and cover "I"

Type R7A/R7I: Fixed switch
Type S7A/S7I: 94mm switch adjustment

Enclosure modules
R7A, R71, S7A, S71

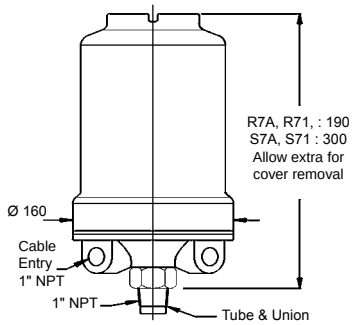

Hazardous area enclosure

Conduit entries
Enclosures supplied with four contact switch mechanisms have a single 1" NPT conduit entry.
Enclosures supplied with eight contact switch mechanisms have 2 × 1" NPT conduit entries.

Tube and Unions: 316 stainless steel throughout. Welded construction with additional swaging technique to ensure maximum integrity. Individually pressure tested to 150 bar (operating pressure will be limited by float or flange specified).

Paint Finish: Black stove paint. Epoxy paint finishes available on request.

1.0 Direct mount displacer controls

Mobrey displacer operated controls are ideal for sump application and other top mounting duties such as low level alarm in deep tanks. Their principle of operation also makes them suitable, in a modified form, for very high pressure or low S.G. applications.

The four most popular displacer arrangements are shown in this schematic diagram, which covers most of the likely applications. However, should you have a different requirement, we would be pleased to quote a model for your particular application.

Principle of operation
The displacer element, made of 316 stainless steel, is suspended on a stainless steel cable from a spring. The element is always heavier than its equivalent volume of the liquid in which it is to operate, and so will extend the tension spring at all times. In free air, the spring will be extended to a known length, controlled by a mechanical stop to prevent overstressing. Fixed to the spring is the float rod and magnet assembly, free to move up and down as the spring extends or contracts, and outside the pressure tube in the usual manner is the switch mechanism.

As liquid rises to cover the displacer element, a bouyancy force is created equal to the weight of the liquid displaced. This force in effect is seen by the spring as a reduction in weight, causing the spring to contract, hence moving the magnet upwards inside the pressure tube and actuating the switch mechanism. On a falling liquid level, the displacer element is uncovered and the spring sees an increasing effective weight, causing the spring to extend and move the magnet to re-set the switch mechanism (Fig i and v).

This simple principle can be refined to operate a single switch over a very wide differential by providing the buoyancy force from two elements instead of just one (Fig ii).

Two switch models are available for either two alarm duty with two narrow differentials (Fig iii) or for pump control/alarm duty with appropriate differentials (Fig iv).

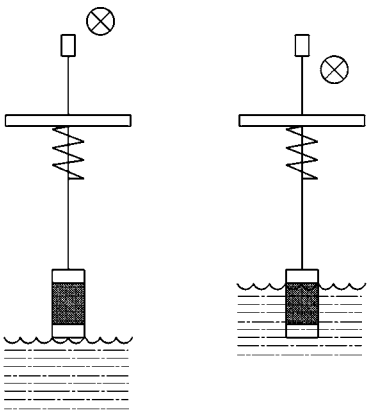

Fig v

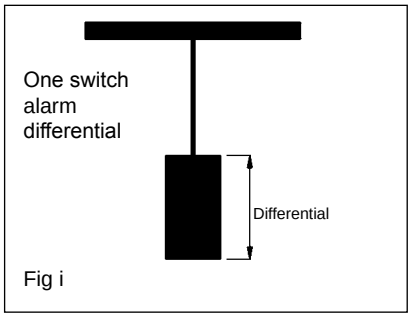

Fig i

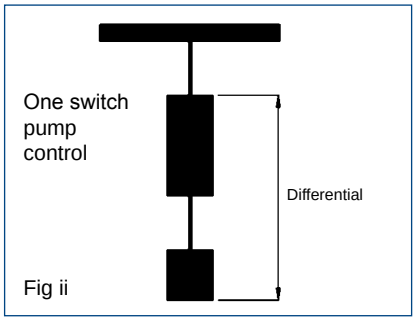

Fig ii

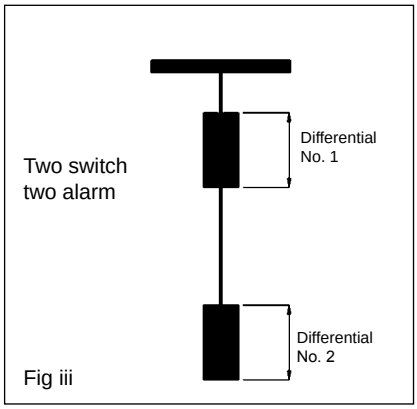

Fig iii

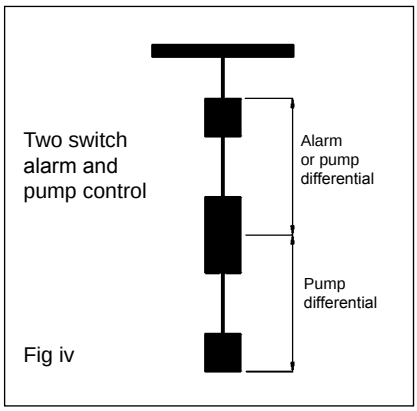

Fig iv

In all cases, because the elements are suspended on a cable, switching or control levels can be several metres below the mounting flange, and are fully field adjustable by re-setting the elements on the cable.

Displacer control

Displacer controls: ordering information

Code	Displacer operated alarm and pump control switches
D	Direct mount: Displacer controls [Note 1]

Code	Material of mounting flange
C	Carbon steel. ASTM A105 (For use +300ºC to -10ºC)
S	316L stainless steel. ASTM A182: F316L (For use +300ºC to -50ºC)

Code	Displacer function and specification							
	Function	Material of Elements	Material of Trim	Material of Spring	S.G. Range 4 Contact	S.G. Range 8 Contact	Operating temp. range	Max. pres. 20ºC
11D	One switch narrow diff.	316 S.S.	316 Stainless Steel	Nimonic 90	0.6 - 1.2	0.75 - 1.2	-50ºC to +300ºC	102 bar
12D	One switch wide diff.	316 S.S.			0.5 - 1.2	0.75 - 1.2	-50ºC to +300ºC	
13D	Two switch 2 wide diff.	316 S.S.			0.6 - 1.2	0.8 - 1.2	-50ºC to +300ºC	
18D	Two switch 2 normal diff.	316 S.S.			0.6 - 1.2	0.8 - 1.2	-50ºC to +300ºC	

Code	Switch enclosure					
	Duty	Material of Base	Material of Cover	Material of wetted parts	Switch adjustment	Max. no. of switch mechanisms
S4N	Weather proof	Aluminium alloy [Note 2]	Drawn steel	316 stainless steel	Adjust switching point by moving displacer elements on cable	2
S7A	Flame proof & Explosion proof	Aluminium alloy [Note 2]	Aluminium alloy			
S7I		Cast iron	Cast iron			

Code	Approvals
U	UL Explosion Proof
C	CSA Explosion Proof
N	UL & CSA General Area, Weatherproof type NEMA 4X
	ATEX Flameproof & Weatherproof IP66 depending on switch enclosure (leave blank)

Code	Number of switch mechanisms
1	Specify 1 for single switch models 11D, 12D
2	Specify 2 for two switch models 13D, 18D

Code	Type of switch mechanism								
	Switch mechanism duty	Max. wetside temperature	A.C. max. values Volts	A.C. max. values Amps	A.C. max. values VA	D.C. max. values Volts	D.C. max. values Res. I	D.C. max. values Ind. I	D.C. max. values Watts
	4 Contact: 2 × SPST								
D4	General purpose	300ºC	440	5	2000	250	5	0.5	50
D4U	Gen. purpose for UL & CSA	300ºC	400	5	2000	250	5	0.5	50
P4	Low power circuits	300ºC	250	0.25	6	250	0.25	0.1	3.6
X4	High power circuits	250ºC	440	10	2000	250	10	0.5	50
H4	Hermetically sealed	250ºC	440	5	2000	250	5	0.5	50
	8 Contact: DPDT								
D8	General purpose	300ºC	440	5	2000	250	5	0.5	50
D8U	Gen. purpose for UL & CSA	300ºC	440	5	2000	250	5	0.5	50
P8	Low power circuits	300ºC	250	0.25	6	250	0.25	0.1	3.6
X8	High power circuits	250ºC	440	10	2000	250	10	0.5	50
H8	Hermetically sealed	250ºC	440	5	2000	250	5	0.5	50

Code	Mounting arrangement	
0	1" N.P.T. Thread: 316 stainless steel standard	These are our stocked flanges. Other flange sizes and ratings are available on request.
60	3" Class 150 RF	
61	3" Class 300 RF	
62	3" Class 600 RF	
65	4" Class 150 RF	
66	4" Class 300 RF	
67	4" Class 600 RF	

D	C	13D	S7A	2	D4 /	60	Typical ordering information

Notes:
1. Supplied with 3m 316 stainless steel displacer cable as standard. Other lengths available on request.
2. Base material will be cast iron whenever 8 contact switches are specified

Customers must state operating pressure, temperature and specific gravity, together with function of each switch mechanism when ordering.

Due to component tolerances, dimensions DB, E and S given on page 7 are approximate and may vary on each control by up to 10mm. Setting the control to operate at the required level can be achieved on site by adjusting the element up or down on the cable as necessary.

Displacer types and dimensional details

Single switch narrow differential: 11D

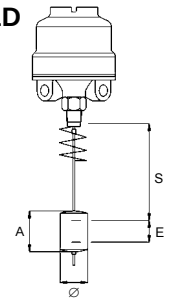

Specify for alarm duty.
Switching level can be changed by simply moving the displacer up or down the cable.

11D St. Steel : A = 216 ∅ = 60.3

Switch types	D4 D4U	P4	X4	H4	D8 D8U	P8	X8	H8
S.G.	0.6	0.75	1.0	1.2	0.75	1.0	1.2	
S min	315	335	365	380	275	320	340	
E	90	70	60	55	135	105	90	

S min = Adjustable distance to upper switching level.
E min = Differential
DB = Minimum dead band

Single switch wide differential: 12D

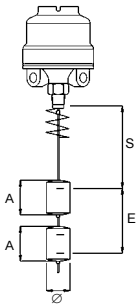

The two displacer elements are positioned at any point on the cable to correspond to the switching levels required. When the liquid level drops to the lower displacer the switch is actuated and starts (or stops) a pump; when the liquid rises to the upper displacer the switch is again actuated to stop (or start) the pump.

12D St. Steel: A = 216 ∅ = 60.3

Switch types	D4 D4U	P4	X4	H4	D8 D8U	P8	X8	H8
S.G.	0.5	0.8	1.0	1.2	0.75	0.8	1.0	1.2
S min	415	430	430	425	390	390	400	400
E min	165	110	95	80	205	200	165	140

Two switch 2 narrow differentials: 18D

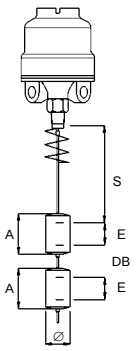

The displacers are positioned to form two elements of similar lengths, such that two alarm points may be given. This arrangement is typical of sump application.

18D St. Steel: A = 216 ∅ = 60.3

Switch types	D4 D4U	P4	X4	H4	D8 D8U	P8	X8	H8
S.G.	0.6	0.8	1.0	1.2	0.8	1.0	1.2	
S min	390	385	375	365	355	350	345	
E min	90	70	60	55	135	105	90	
Dead band	200	230	255	310	165	215	250	

Two switch 2 wide differentials: 13D

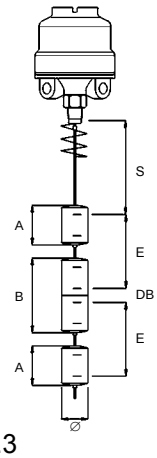

A pump is controlled between the middle and the lower pump displacers positioned on the cable at the required levels. Should the level rise to the upper displacer this actuates the upper alarm switch which remains actuated until the level drops to the middle displacer.
Alternatively, the upper switch could control a second pump.

13D St. Steel: A = 152 B = 304 ∅ = 60.3

Switch types	D4 D4U	P4	X4	H4	D8 D8U	P8	X8	H8
S.G.	0.6	0.8	1.0	1.2	0.8	1.0	1.2	
S min	390	385	375	365	355	350	345	
E min	135	110	95	80	200	145	140	
Dead band	220	255	285	310	165	215	250	

Switch mechanisms		Switch enclosures	
4 Contact: D4 D4U P4 X4 H4	8 Contact: D8 D8U P8 X8 H8	Weatherproof: S4N	Flameproof: S7A S7I
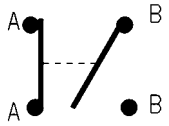 2 × independent SPST AA make on rise: BB Make on fall	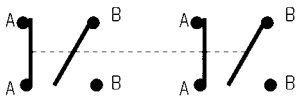 Double pole double throw (4 × independent SPST) AA make on rise, BB make on fall	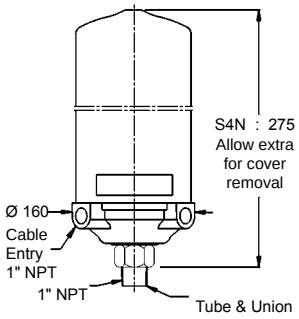	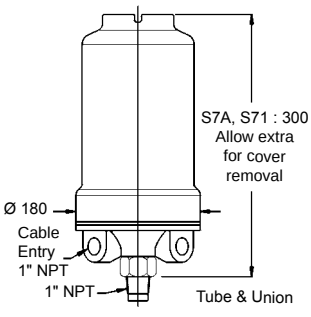

2.0 Direct Mounting Float Switches: Ordering Information

Code	Float operated alarm and pump control switches
D	Direct mount: Float switches

Code	Material of mounting flange
C	Carbon steel ASTM A105 (for use + 400°C to -10°C)
S	316L stainless steel ASTM A182: F316L (for use + 400°C to -101°C)

Code	Minimum S.G.	Pressure rating (bar) 20°C	250°C	400°C	Float diameter	Matching enclosures	Matching mounting flanges
11F	0.80	34.5	22.5	20.0	67	All models	3" NB and larger
12F	0.75	102.1	66.3	59.2	90		
13F	0.65	51.1	33.2	29.6	88		4" NB minimum
14F	0.54	19.6	12.7	11.3	88		

Code	Duty	Material of base	Material of cover	Material of wetted parts	Switch adjustment	Max. no. of switches 4 Contact	8 Contact
R4N	Weatherproof IP66	Aluminium alloy*	Drawn steel	316 stainless steel	None	1	1
S4N					94mm	4	2
L4N					194mm	6	3
R7A	Flameproof & Explosion-proof	Aluminium alloy*	Aluminium alloy		None	1	1
S7A					94mm	4	2
R7I		Cast iron	Cast iron		None	1	1
S7I					94mm	4	2

Code	Approvals
U	UL Explosion Proof
C	CSA Explosion Proof
N	UL & CSA General Area, Weatherproof type NEMA 4X
	ATEX Flameproof & Weatherproof IP66 depending on switch enclosure (leave blank)

Code	Number of switch mechanisms
1-6	As required: see max. number allowable in switch enclosure data above

Code	Switch mechanism duty	Max. wetside temp.	AC max values Volts	Amps	VA	DC max values Volts	Res. I	Ind. I	Watts
	4 contact: 2 x SPST								
D4	General purpose	400°C	440	5	2000	250	5	0.5	50
D4U	Gen. purpose for UL & CSA	400°C	440	5	2000	250	5	0.5	50
P4	Low power circuits	400°C	250	0.25	6	250	0.25	0.1	3.6
X4	High power circuits	250°C	440	10	2000	250	10	0.5	50
H4	Hermetically sealed	250°C	440	5	2000	250	5	0.5	50
	8 contact: DPDT								
D8	General purpose	400°C	440	5	2000	250	5	0.5	50
D8U	Gen. purpose for UL & CSA	400°C	440	5	2000	250	5	0.5	50
P8	Low power circuits	400°C	250	0.25	6	250	0.25	0.1	3.6
X8	High power circuits	250°C	440	10	2000	250	10	0.5	50
H8	Hermetically sealed	250°C	440	5	2000	250	5	0.5	50

Code	Mounting arrangement
0	1" NPT thread: 316 stainless steel standard
60	3" Class 150RF
61	3" Class 300RF
62	3" Class 600RF
65	4" Class 150RF
66	4" Class 300RF
67	4" Class 600RF

These are our stocked flanges. Other flange sizes and ratings are available on request

D	C	12F	L4N	4	D4 /	67	Typical ordering information

Note :

*Base material will be cast iron whenever 8 contact switches specified.

Instrument pressure rating is the lower of either the float or mounting flange

Direct Mounting Float Dimensions

Floats for 3" NB mounting: 11F	Floats for 4" NB mounting: 12F, 13F, 14F
11F 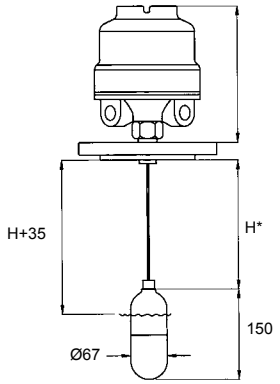 *Float rod may be shortened to suit	12F, 13F, 14F 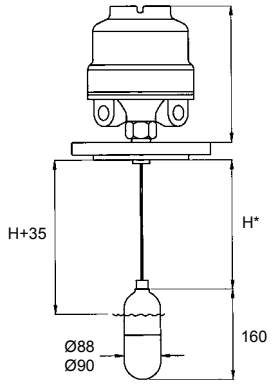 *Float rod may be shortened to suit

H dimension when used with:	11F		Switch adjustment	Wet switching differential	12F 13F 14F		Switch adjustment	Wet switching differential
	min H	max H			min H	max H		
R4N R7A R7I	155	315	None	20mm	155	415	None	20mm
S4N S7A S7I	155	315	94mm	104mm max.	155	415	94mm	104mm max.
L4N					155	415	194mm	214mm max.

Switch Enclosures

Weatherproof: R4N S4N L4N	Flameproof: R7A R7I S7A S7I
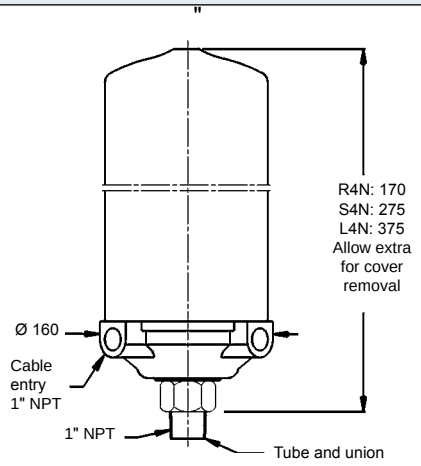	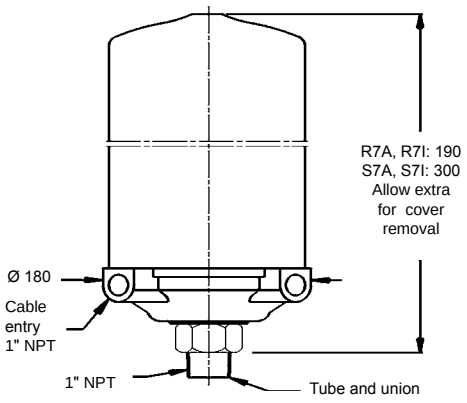

Switch Mechanisms

4 Contact D4, D4U, P4, X4, H4	8 Contact D8, D8U, P8, X8, H8
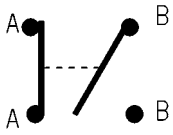 2 x independent SPST AA make on rise: BB make on fall	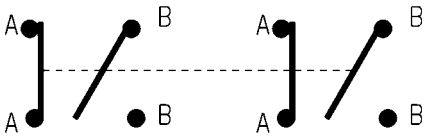 Double pole double throw (4 x independent SPST) AA make on rise: BB make on fall

3.0 Carbon Steel Chamber Mounted Controls: Ordering Information

Code	Chamber mounted controls
B	Bottle Style: Float sealed inside chamber during manufacture
X	Flanged Style: Float may be removed from chamber for routine maintenance

Code	Material of contruction of chamber
C	Carbon steel: See page 15

Code	Floats									
	Float & trim material	Minimum S.G	Flanged Style chambers (X) Pressure rating (bar)			Bottle Style chambers (B) Pressure rating (bar)				Chamber body size
			20ºC	250ºC	400ºC	20ºC	250ºC	400ºC		
11F	316 stainless steel	0.80	34.5	22.5	20.0	30.1	22.5	20.0	Refer to page15 for process connection ratings Note: single switch only	3" N.B.
12F		0.75	102.1	66.3	59.2	88.8	66.3	59.2		4" N.B.
13F		0.65	51.1	33.2	29.6	44.6	33.2	29.6		
14F		0.54	19.6	12.7	11.3	17.1	12.7	11.3		
17D		0.40	102.1	66.3	59.2	88.8	66.3	59.2		

Code	Switch Enclosure						
	Duty	Material of Base	Material of Cover	Material of wetted parts	Switch adjustment	Max. no. of switches 4 Contact	Max. no. of switches 8 Contact
R4N	Weatherproof IP66	Aluminium alloy*	Drawn steel	316 stainless steel	None	1	1
S4N					94mm	4	2
R7A		Aluminium	Aluminium		None	1	1
S7A	Flameproof & Explosionproof	alloy*	alloy		94mm	4	2
R71		Cast	Cast		None	1	1
S71		iron	iron		94mm	4	2

Code	Approvals
U	UL Explosion Proof
C	CSA Explosion Proof
N	UL & CSA General Area, Weatherproof type NEMA 4X
	ATEX Flameproof & Weatherproof IP66 depending on switch enclosure (leave blank)

Code	Number of switch mechanisms
1 - 4	As required: see max. number allowable in switch enclosure and float data above

Code	Type of switch mechanism								
	Switch mechanism duty	Max. wetside temperature	A.C. max. values			D.C. max values			
			Volts	Amps	VA	Volts	Res. I	Ind. I	Watts
	4 Contact: 2 × SPST								
D4	General purpose	400ºC	440	5	2000	250	5	0.5	50
D4U	Gen. purpose for UL & CSA	400ºC	440	5	2000	250	5	0.5	50
P4	Low power circuits	400ºC	250	0.25	6	250	0.25	0.1	3.6
X4	High power circuits	250ºC	440	10	2000	250	10	0.5	50
H4	Hermetically sealed	250ºC	440	5	2000	250	5	0.5	50
	8 Contact: DPDT								
D8	General purpose	400ºC	440	5	2000	250	5	0.5	50
D8U	Gen. purpose for UL & CSA	400ºC	440	5	2000	250	5	0.5	50
P8	Low power circuits	400ºC	250	0.25	6	250	0.25	0.1	3.6
X8	High power circuits	250ºC	440	10	2000	250	10	0.5	50
H8	Hermetically sealed	250ºC	440	5	2000	250	5	0.5	50

Code	Process connection configuration
1	Side/bottom
2	Side/side with 1" NPT drain

Code	Process connection size & rating			
	Chamber : 3" & 4" N.B.	Code	Chamber : 4" N.B.only	These are our stocked sizes. Other flange sizes and ratings are available on request. Instrument pressure rating is the lower of either the float or process flange.
01	1" N.P.T.: 316 s/s Std.	21	1½" Class 150 RF	
11	1" Class 150 RF	22	1½" Class 300 RF	
12	1" Class 300 RF	23	1½" Class 600 RF	
13	1" Class 600 RF	25	DN40 PN16	
15	DN25 PN16	31	2" Class 150 RF	
16	DN25 PN25	32	2" Class 300 RF	
17	DN25 PN40	33	2" Class 600 RF	
18	DN25 PN64	35	DN50 PN16	
19	DN25 PN100	36	DN50 PN25	
		37	DN50 PN40	

X	C	14F	S7A	2	D4 / 2	10	Typical ordering information

Note:
* Base material will be cast iron whenever 8 contact switches are specified.
State process connection centres when ordering. See page 14 for standard dimensions. Instrument pressure rating is the lower of either the float or the process flange.

Chamber Type and Material of Construction

Carbon steel: Bottle construction BC	Carbon steel: Flanged construction XC

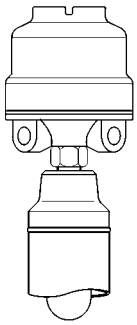

Float is sealed inside chamber during manufacture

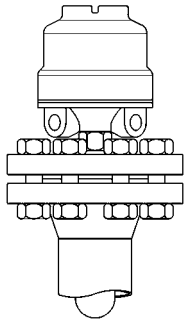

Float may be removed from chamber for routine maintenance, cleaning or inspection

Switch Enclosures

Weatherproof: R4N S4N	Flameproof: R7A S7A R71 S71

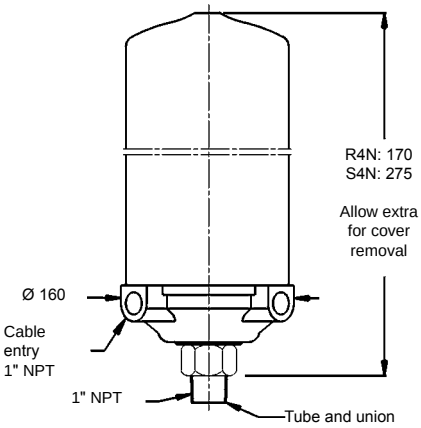

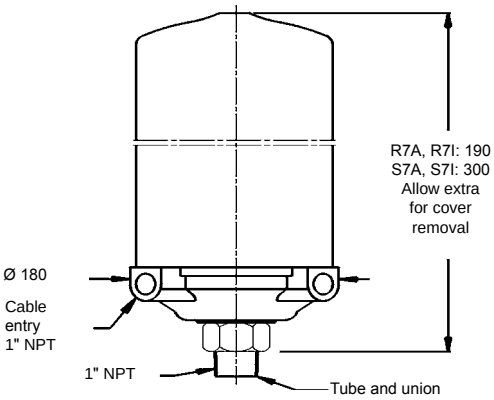

Switch Mechanisms

4 contact: D4 D4U P4 X4 H4	8 contact: D8 D8U P8 X8 H8

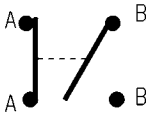

2 × independent SPST
AA make on rise: BB make on fall

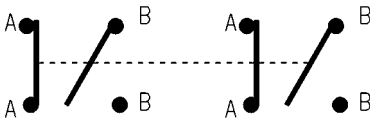

Double pole double throw (4 × independent SPST)
AA make on rise: BB make on fall

Process Connection Configuration

Side and Bottom - 1	Side and Side with Drain - 2

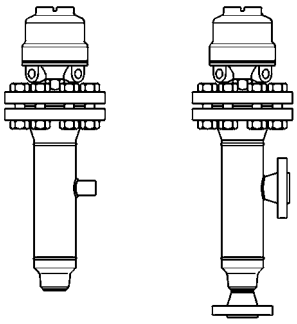

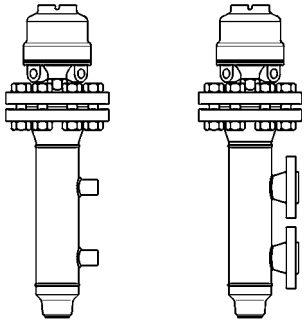

Chamber dimensions, operating levels and technical data are given on page 14

4.0 316L Stainless Steel Chamber Mounted Controls: Ordering Information

Code	Chamber mounted controls
B	Bottle Style: Float sealed inside chamber during manufacture
X	Flanged Style: Float may be removed from chamber for routine maintenance

Code	Material of contruction of chamber
S	316L stainless steel: see page 15

Code	Floats									
	Float and trim material	Minimum S.G	Flanged Style chambers (X) Pressure rating (bar)			Bottle Style chambers (B) Pressure rating (bar)				Chamber body size
						20ºC	250ºC	400ºC		
12F	316 stainless steel	0.75	102.1	66.3	59.2	88.8	66.3	59.2	Refer to page15 for process connection ratings	4" N.B.
13F		0.65	51.1	33.2	29.6	44.6	33.2	29.6		
14F		0.54	19.6	12.7	11.3	17.1	12.7	11.3		
17D		0.40	102.1	66.3	59.2	88.8	66.3	59.2	Note: single switch only	

Code	Switch Enclosure						
	Duty	Material of Base	Material of Cover	Material of wetted parts	Switch adjustment	Max. no. of switches 4 Contact	8 Contact
R4N	Weatherproof IP66	Aluminium alloy*	Drawn steel	316 stainless steel	None	1	1
S4N					94mm	4	2
R7A	Flameproof & Explosionproof	Aluminium alloy*	Aluminium alloy		None	1	1
S7A					94mm	4	2
R7I		Cast iron	Cast iron		None	1	1
S7I					94mm	4	2

Code	Approvals
U	UL Explosion Proof
C	CSA Explosion Proof
N	UL & CSA General Area, Weatherproof type NEMA 4X
	ATEX Flameproof & Weatherproof IP66 depending on switch enclosure (leave blank)

Code	Number of switch mechanisms
1 - 4	As required: see max. number allowable in switch enclosure and float data above

Code	Type of switch mechanism								
	Switch mechanism duty	Max. wetside temperature	A.C. max. values			D.C. max. values			
			Volts	Amps	VA	Volts	Res. I	Ind. I	Watts
	4 Contact: 2 × SPST								
D4	General purpose	400ºC	440	5	2000	250	5	0.5	50
D4U	Gen. purpose for UL and CSA	400ºC	440	5	2000	250	5	0.5	50
P4	Low power circuits	400ºC	440	0.25	6	250	0.25	0.1	3.6
X4	High power circuits	250ºC	250	10	2000	250	10	0.5	50
H4	Hermetically sealed	250ºC	440	5	2000	250	5	0.5	50
	8 Contact: DPDT								
D8	General purpose	400ºC	440	5	2000	250	5	0.5	50
D8U	Gen. purpose for UL and CSA	400ºC	440	5	2000	250	5	0.5	50
P8	Low power circuits	400ºC	250	0.25	6	250	0.25	0.1	3.6
X8	High power circuits	250ºC	440	10	2000	250	10	0.5	50
H8	Hermetically sealed	250ºC	440	5	2000	250	5	0.5	50

Code	Process connection configuration
1	Side/bottom
2	Side/side with 1" NPT drain

Code	Process connection size & rating		
01	1" N.P.T. 316 stainless steel standard	22	1½" Class 300 RF
11	1" Class 150 RF	23	1½" Class 600 RF
12	1" Class 300 RF	31	2" Class 150 RF
13	1" Class 600 RF	32	2" Class 300 RF
21	1½" Class 150 RF	33	2" Class 600 RF

B	S	17D	4N	1	X8 /	2	33	Typical ordering information

Note:

* Base material will be cast iron whenever 8 contact switches are specified

State process connection centres when ordering. See page 14 for standard dimensions. Instrument pressure rating is the lower of either the float or the process flange.

Chamber Type and Material of Construction

Carbon steel: Bottle construction BS	Carbon steel: Flanged construction XS

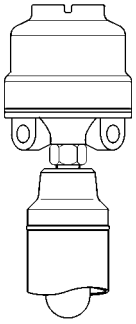

Float is sealed inside chamber during manufacture

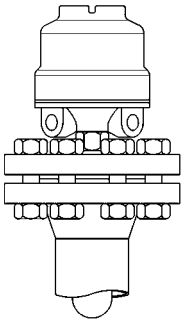

Float may be removed from chamber for routine maintenance, cleaning or inspection

Switch Enclosures

Weatherproof: R4N S4N	Flameproof: R7A S7A R71 S71

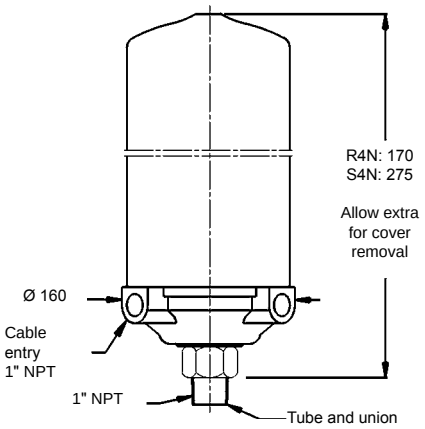

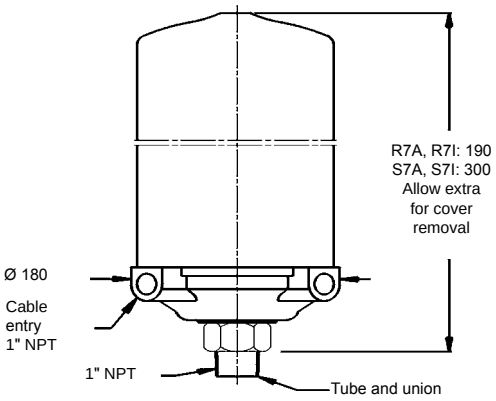

Switch Mechanisms

4 contact: D4 D4U P4 X4 H4	8 contact: D8 D8U P8 X8 H8

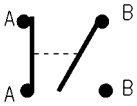

2 × independent SPST
AA make on rise: BB make on fall

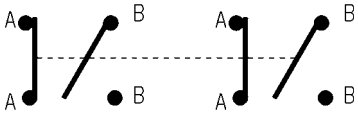

Double pole double throw (4 × independent SPST)
AA make on rise: BB make on fall

Process Connection Configuration

Side and Bottom - 1	Side and Side with Drain - 2

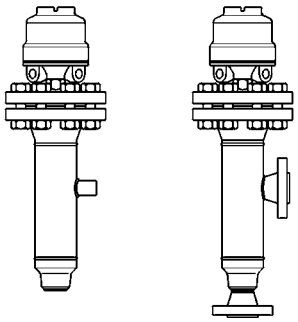

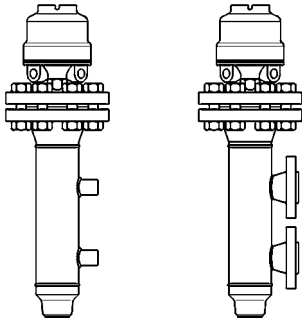

Chamber dimensions, operating levels and technical data are given on page 14

Dimensional and Operating Level Data

Style 1: Side and Bottom	Style 2: Side and Side

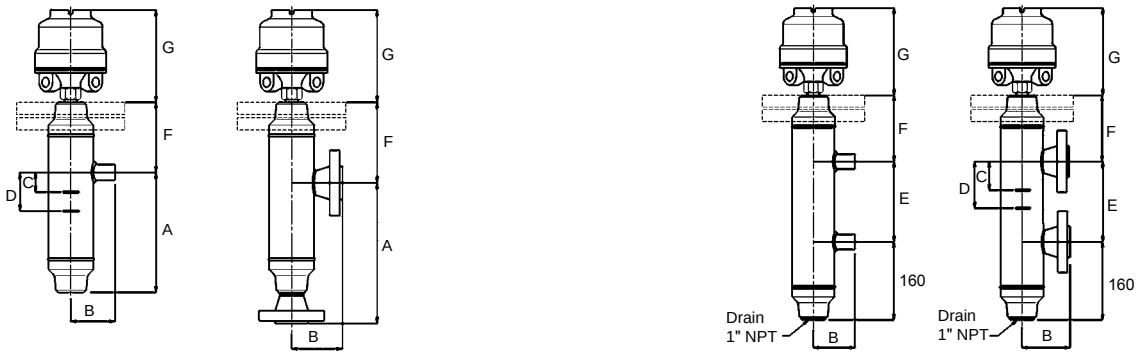

Screwed Flanged

Process connections	A		B*	C	D		E		F	
	Single switch 'R' head	Multi-type 'S' head	Chamber type BC/others		Single switch 'R' head	Multi-switch 'S' head	Single switch 'R' head	Multi-switch 'S' head	Chamber type BC/BS	Chamber type XC/XS
1" NPT (side/bottom)	300	385	76/95	50	70	155	-	-	48/160	225
1" NPT (side/side)	-	-	95	50	70	155	271	356	160	225
1" 150	356	441	110	50	70	155	271	356	160	225
1" 300	356	441	117	50	70	155	271	356	160	225
1" 600	356	441	123	50	70	155	271	356	160	225
DN25 PN16	356	441	94	50	70	155	271	356	160	225
DN25 PN25	356	441	96	50	70	155	271	356	160	225
DN25 PN40	356	441	96	50	70	155	271	356	160	225
DN25 PN64	356	441	114	50	70	155	271	356	160	225
DN25 PN100	356	441	114	50	70	155	271	356	160	225
1½" 150	356	441	115	50	70	155	271	356	160	225
1½" 300	356	441	121	50	70	155	271	356	160	225
1½" 600	356	441	126	50	70	155	271	356	160	225
DN40 PN16	356	441	97	50	70	155	271	356	160	225
2" 150	356	441	112	50	70	155	271	356	160	225
2" 300	356	441	118	50	70	155	271	356	160	225
2" 600	356	441	129	50	70	155	271	356	160	225
DN50 PN16	356	441	98	50	70	155	271	356	160	225
DN50 PN25	356	441	101	50	70	155	271	356	160	225
B* Dimension given is for 4" NB chamber (12F, 13F, 14F & 17D Floats). For 3" NB chamber (11F Float) subtract 13mm.										
Operating levels: Type 17D float in any chamber.										
Operating S.G.	0.4	0.5	0.6	0.7	0.8	0.9	1.0	1.1	1.2	
Dimension C	65	73	82	91	100	109	118	127	136	
Dimension D	118	122	127	132	137	141	147	152	156	

Notes: C = Highest operating liquid level
D (Single switch) = Reset level
D (Multi switch) = Lowest operating liquid level
D-C = Wet switching differential (max)
All dimensions in mm.

NOTE: Dimensions given are for reference only, and must be certified on order.

Dimensional data: enclosures Type	Duty	Height G	Conduit thread*	Switch adjustment	Weatherproof rating
R7A, R7I	Flameproof & Explosion proof	190	1" NPT	None	IP66 to IEC60529 (NEMA 4)
S7A, S7I		300		94	
R4N	Weatherproof	170	1" NPT	None	IP66 to IEC60529 (NEMA 4)
S4N		275		94	
L4N		375		194	

*Enclosures for use with 8 contact switch mechanisms have both conduit entries threaded, whilst those for use with 4 contact switch mechanisms have only one conduit entry.

Technical Data

Mobrey vertical level controls are manufactured to the highest standards of quality with only certified materials: BS EN 10204 : 2004-3.1. Design of Mobrey chambers is in accordance with ASME B31.3. Relevant chambers are supplied CE marked and fully compliant with the Pressure Equipment Directive (97/23/EC).

Weld procedures approved to EN ISO 15614-1 and ASME IX, welders approved to BSEN 287-1. Circumferential and set-on branch welds are full penetration welds, with visual inspection in accordance with ASME B31.3 "normal service" requirements and our company standard 417.

All pressure retaining assemblies are hydrostatically pressure tested to a minimum of 1.43 × maximum working pressure or to flange standard requirements.

Radiography or other NDT techniques can be accommodated provided that they are specified at time of order entry.

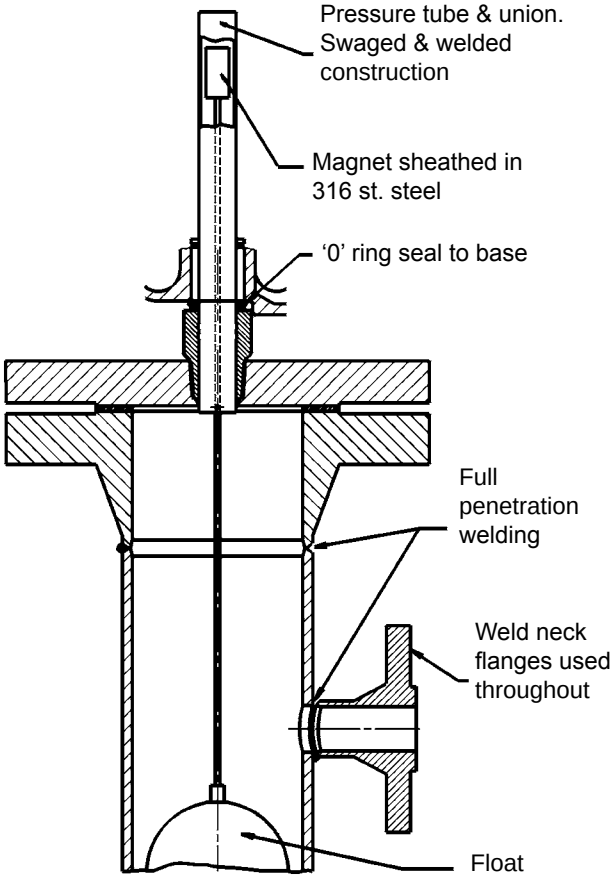

Inspection

Whilst Mobrey employ inspectors in house, unconnected with production, customers frequently ask for outside inspection. We are happy to accommodate nominated inspectors if agreed at order entry.

Some specifications require a quality control plan detailing inspection points and hold points. Mobrey will produce these QC plans for customer approval if agreed at order entry.

Pressure Ratings (bar)

Material	Carbon steel: A105			Stainless steel: 316L		
	20ºC	250ºC	400ºC	20ºC	250ºC	400ºC
ASME B16.5 Class 150	19.6	12.1	6.5	15.8	10.1	6.5
ASME B16.5 Class 300	51	41.7	34.5	41.3	26.6	23
ASME B16.5 Class 600	102	83.6	69	82.7	53.4	46.1
BS EN 1092-1 PN16	16	14.4	10.8	12.3	7.9	6.8
BS EN 1092-1 PN25	25	22.5	16.9	19.2	12.4	10.7
BS EN 1092-1 PN40	40	36	27	30.6	19.8	17.1

Technical specification		
Materials of construction	**Carbon steel chamber**	**Stainless steel chamber**
Chamber tube	ASTM A106 grade B	ASTM A312 TP316L
Top casting	ASTM A216	- -
Top/bottom caps	ASTM A105	ASTM A182 F316L / A403 WP316L
Top cover	ASTM A105	ASTM A182 F316L
Flanges/fittings	ASTM A105	ASTM A182 F316
Studs	ASTM A193-B7	ASTM A320-L7
Nuts	ASTM A194-2H	ASTM A194 Grade 7+S3
Standard carbon steel chambers +400ºC to -10ºC. Stainless steel chambers +400°C to -101°C		

Options

- Low temperature carbon steel
- Process connections to specification
- Duplex UNS31803
- Ratings up to ASME Class 2500
- Cr. mo. steels
- 3.1 Identifiable certification
- N.A.C.E. requirements
- N.D.T. to your specifications
- Vent and drain connections

Technical specification sheet
IP107
May 2008

Level

Mobrey “Fit and Forget” Products Provide The Solution To Your Liquid Level Control Problems

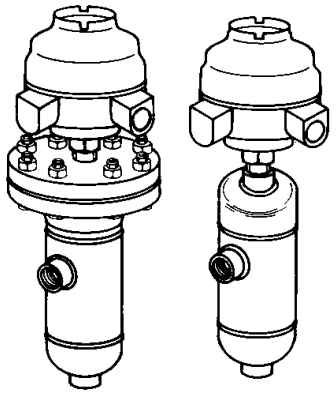

Medium pressures
ASME Class 150, 300 600
SG 0.4
Pages 10-13

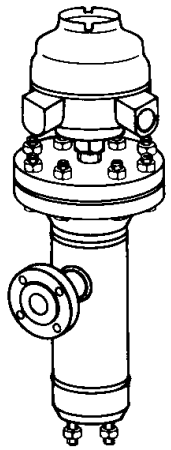

High pressures
ASME Class 900, 1500, 2500
SG 0.40
To order

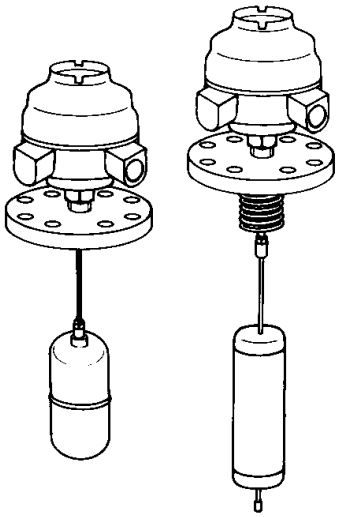

Direct mounting
ASME Class 150, 300, 600
SG 0.4
Pages 5-9

You can rely on us

The Mobrey range of vertical liquid level controls is designed for operation in a wide variety of applications.

Typical Applications

Separators	Water Sumps
Compressors	Scrubbers
Knock-out Pots	Fractioning Columns
Condensors	Flash Vessels
De-aerators	Process Vessels
Storage Tanks	Condensate Tanks
Service Tanks	Drainpots
Header Tanks	Accumulators
Effluent Sumps & Tanks	Fuel Tanks
Heat Exchangers	Feedwater Heaters
Lude Oil Tanks	Surge Drums

Mobrey level switches are used for the control of liquids by companies all over the world.

Shell	Bechtel
Exxon	Bellili
Amoco	Ontario Hydro
Fluos	Nissaei-Sangyo
Hyundai	Foster Wheeler
British Petroleum	Siemens
Mobil	Mannesmann-Demag
Texaco	Catalytic
Ingersoll Rand	Techni
Compair	Technipetrol
Honeywell	Nuovo Pignone
Wemco	Dresser

International:
Emerson Process Management
Mobrey Measurement
158 Edinburgh Avenue, Slough,
Berks UK SL1 4UE
T +44 (0)1753 756600
F +44 (0)1753 823589
www.mobrey.com

Americas:
Emerson Process Management
8200 Market Boulevard
Chanhassen, MN USA 55317
T (US) (800) 999-9307
T (International) 952) 906-8888
F (952) 949-7001

EMERSON
Process Management